MA 511: Computer Programming

Lecture 8: Pointers

http://www.iitg.ernet.in/psm/indexing_ma511/y10/index.html

Partha Sarathi Mandal

psm@iitg.ernet.ac.in

Dept. of Mathematics, IIT Guwahati

Semester 1, 2010-11

pointers

- Is a ***variable*** that represents the ***location*** (address) of a data item.
- Each data item occupies one or more contiguous memory cells in computer memory.
- No of memory cells depends on the type of data item.
  - A single character needs 1 byte (8bits)
  - An integer usually needs 2 contiguous bytes
  - A floating point no needs 4 contiguous bytes
  - Double-precision quantity may needs 8 contiguous bytes

pointers

- Let v is a variable of some data item.
  float v;
- Then data item can then be assessed if we know the location of *first* memory cell.
- &v = address of v's memory location.

pv = &v; // **&** unary operator, *address operator*

pv = pointer of the variable v

v = *pv;// * unary operator, *indirection operator*

v, *pv = represent same data type.

Now if pv = &v and u = *pv then u and v represent the same value.

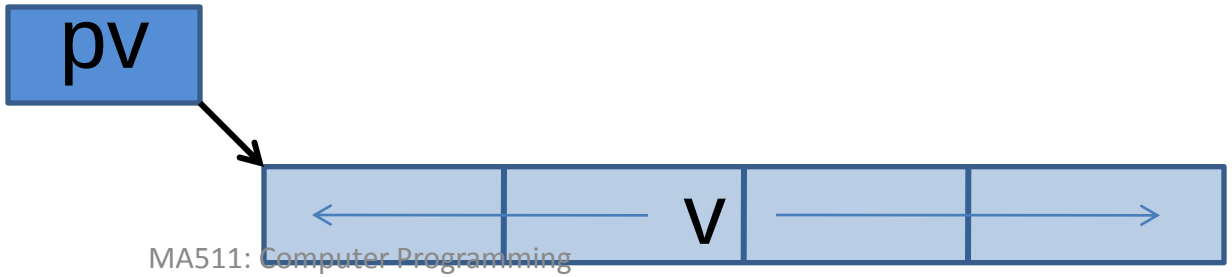

Example: pointers

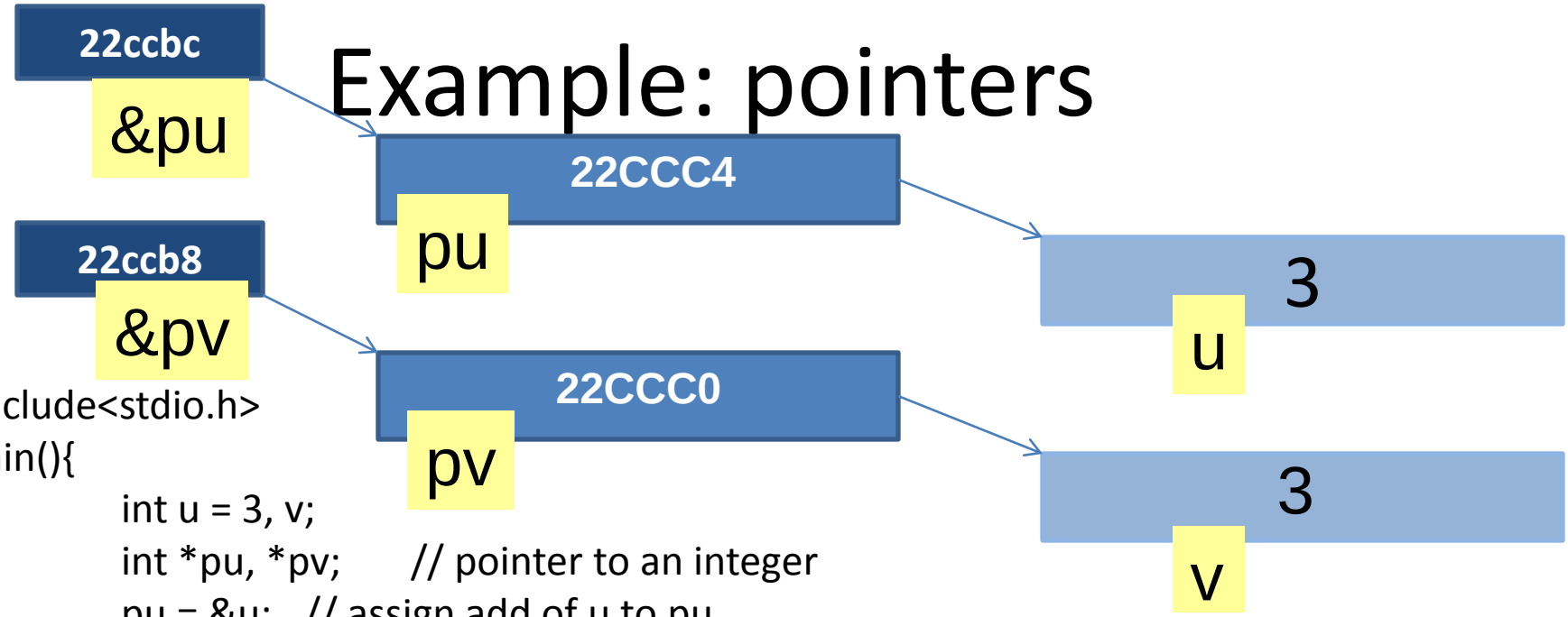


```
#include<stdio.h>
main(){
        int u = 3, v;
        int *pu, *pv;      // pointer to an integer
        pu = &u;   // assign add of u to pu
        v = *pu;                // assign value of u to v
        pv = &v;   // assign add of v to pv
printf("u=%d  &u = %X pu = %x *pu =%d\n", u, &u, pu, *pu);
printf("v=%d  &v = %X  pv = %x *pv =%d\n",  v, &v,  pv,  *pv);
}
```

Output:

u=3 &u = 22CCC4 pu = 22ccc4 *pu =3

v=3 &v = 22CCC0 pv = 22ccc0 *pv =3

Example: pointers

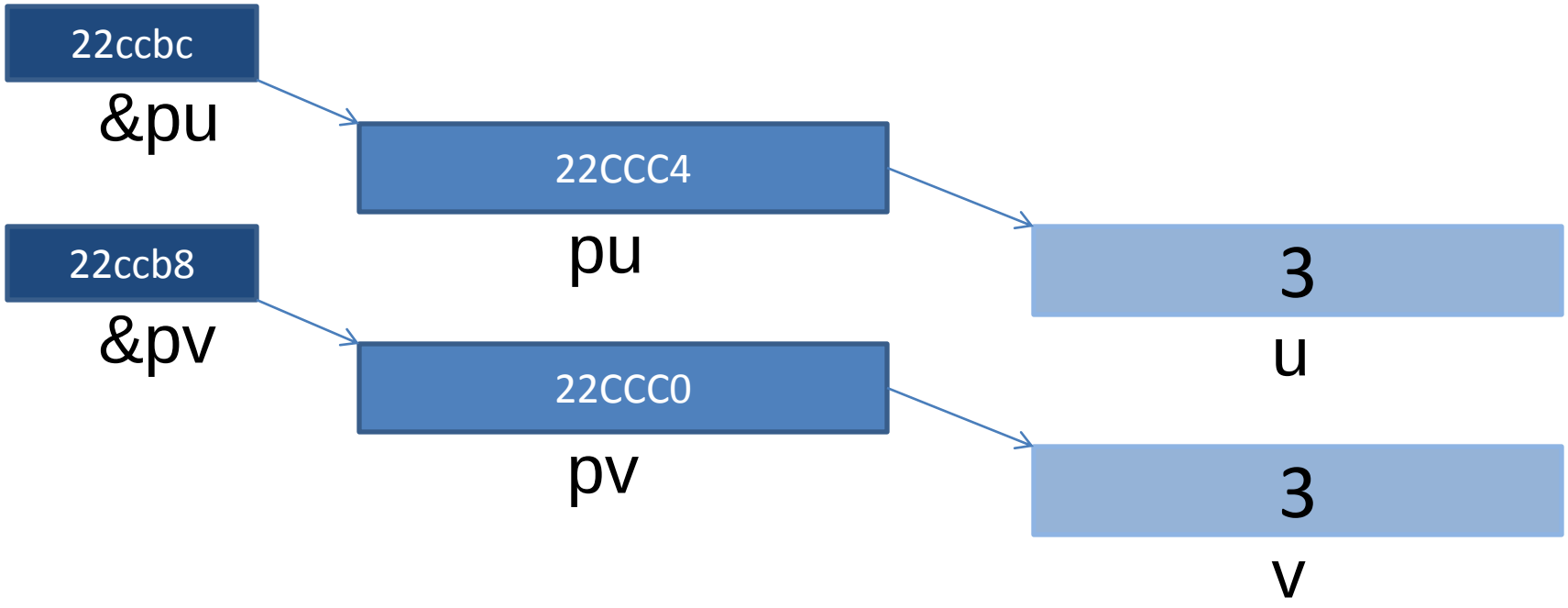

swap

```
/* swap values of two variables using function and passing pointer as arguments */
void swap(int *a, int *b){
        int temp;
        temp = *a;
        *a = *b;
        *b = temp;
}
main(){
        int x = 15, y = 24, *px, *py;
        px = &x; py = &y;
        printf("x= %d y= %d, px = %x, py = %x\n", x, y, px, py);
        swap(px, py);
        printf("x= %d y= %d, px = %x, py = %x\n", x, y, px, py);
}
```

Output:

```
x= 15 y= 24, px = 22ccc4, py = 22ccc0
x= 24 y= 15, px = 22ccc4, py = 22ccc0
```

swap

```
/* swap values of two variables using function and passing pointer as arguments */
void swap(int *a, int *b){
	int temp;
	temp = *a;
	*a = *b;
	*b = temp;
}
main(){
	int x = 15, y = 24;
	printf("x= %d y= %d, &x = %x, &y = %x\n", x, y, &x, &y);
	swap(&x, &y);
	printf("x= %d y= %d, &x = %x, &y = %x\n", x, y, &x, &y);
}
```

Output:

```
x= 15 y= 24, &x = 22ccc4, &y = 22ccc0
x= 24 y= 15, &x = 22ccc4, &y = 22ccc0
```